Stock ☺

Work Order ID 142187

142187

Wednesday, March 02, 2016 8:35:22 AM

Item ID: D350-607-541 **Accept** *N900040100* **Setup Start** *NS1*

Revision ID: **Stop** *NS2*

Item Name: Quick Release Heli-Utility-Basket™ Long, HD Lid, Spacepod™/Squirrel Cheek Comp.

Start Date: 3/7/2016 **Start Qty:** 1.00 *1* **Cust Item ID:**

Required Date: 3/14/2016 **Req'd Qty:** 1.00 *1* **Customer:**

Reference:

Approvals: **Process Plan:** _____ **Date:** 16-3-02 **Tooling:** _____ **Date:** _____ **Run Start** *NR1*

QC: _____ **Date:** _____ **SPC (Y/N):** _____ **Date:** _____ **Stop** *NR2*

Draw Nbr	Revision Nbr
D350-607-3	D
DSI9699	A

Sequence ID/ Work Center ID	Operation Description	Set Up/ Run Hours	Tool ID	Tool #	Plan Code	Accept Qty	Reject Qty	Reject Number	Insp. Stamp
100	Document Control	0.00	DAS 6 9-89					MLS 1603-10	
100	DOCUMENT CONTROL								
DC	**Memo**	0.00				DAS 27 9-89			
Doc.Control -USB or Paperwork	Photocopy bluefile & type labels per PPP D350-607-541 CHG007								
						MAR 11 2016			
110	Pick Kit	0.00							
110						DAS 6 9-89		MAR 08 2016	
Packaging	**Memo**	0.01							
Packaging						DAS 28 9-89			

DQA: _____ Date: _____

WORK ORDER NON-CONFORMANCE / UPDATE

DART AEROSPACE

QA Closed: Date: Work Order update only ☐

Work Order: _____

Part No. _____

NCR No.

DISPOSITION

Rework ☐
Scrap ☐
Use-as-is ☐
Suspected Unapproved ☐

AGAINST DEPARTMENT/PROCESS

Skid-tube ☐	Cross tube ☐	Water Jet ☐	Engineering ☐
Machining ☐	Small Fab ☐	Prod. Eng. Coor. ☐	Quality ☐
Thermoforming ☐	Finishing ☐	Rec/Store/Packaging ☐	Other ☐
Large Fab ☐	Composite ☐	Supplier ☐	

Date :	Step #:	QTY Effective :	MRB (QSI042) Approval

Description Work Order Deviation	Disposition	Completed By
		Lead hand / Supervisor Approval Verification
		QC / QA Coordinator Approval

Root Cause

Environment ☐	☐ No Re-verfication	Misidentified ☐	☐ Past Due
Design ☐	☐ Operator	Past Expiry Date ☐	☐ Manufacturing Process
Doc/Data ☐	☐ Offset/Setup	Substation ☐	☐ Process Improvement
Equip/Tooling ☐	☐ Supplier	LOA ☐	☐ Product Improvement
Handling/Pre ☐	☐ Training	Tribal Knowledge ☐	☐ Rushing
Material ☐	☐ Use for Testing	Internal Transport ☐	☐ Poor Information

FAULT CATEGORY

☐ Pressure/Forced	☐ Temperature/Cure	☐ Power Loss/Surge	☐ Positioned Wrong
☐ Bending	☐ Set-up	☐ Folio/Program	☐ Outside Dimensions
☐ Centre Not Concentric	☐ BOM/Route	☐ Grain	☐ Over/Under tolerance
☐ Cracks	☐ Broken/Damage/Defect	☐ Weld	☐ Part Incorrect
☐ Crimp/Kink/Ripple/Wave	☐ Inspection Incomplete/Unqualified	☐ Wrong Stock Pulled	☐ Part Lost/Missing
☐ Cuffs	☐ Contamination	☐ Out of Sequence	☐ Part Moved
☐ Crushing	☐ Countersink	☐ Off-set	☐ Drawing
☐ Heat Treat	☐ Cut Too Short	☐ Mislabeled	☐ Finish
☐ Wave/Twist in Tube	☐ Instructions Incomplete/Unclear	☐ Fit/Function	☐ Misread
☐ Marks/Chatter	☐ Drill Holes	☐ Misaligned/off center	☐ Turning Sequence

☐ OTHER :

Item ID: D350-607-541 **Accept** *N900040100* **Setup Start** *NS1*
Revision ID: **Stop** *NS2*
Item Name: Quick Release Heli-Utility-Basket™ Long, HD Lid, Spacepod™/Squirrel Cheek Comp.

Start Date: 3/7/2016 **Start Qty:** 1.00 *1* **Cust Item ID:**
Required Date: 3/14/2016 **Req'd Qty:** 1.00 *1* **Customer:**
Reference:

Approvals: **Process Plan:** _____ **Date:** _____ **Tooling:** _____ **Date:** _____
QC: _____ **Date:** _____ **SPC (Y/N):** _____ **Date:** _____

Run Start *NR1*
Stop *NR2*

Sequence ID/ Work Center ID	Operation Description	Set Up/ Run Hours	Tool ID	Tool #	Plan Code	Accept Qty	Reject Qty	Reject Number	Insp. Stamp
120	QC4- 100% Inspect kits for completeness	0.00							
120									
QC	**Memo**	0.00							
Quality Control						DAS 27 9-89 MAR 1 9 2016			
130	Pick Kit	0.00							
130									
Packaging	**Memo**	0.00				DAS 27 9-89			
Packaging	Package as per PPPD350-607-541 BK002					MAR 1 1 2016			
140	QC21- Final Inspection - Work Order Release	0.00							
140									
QC	**Memo**	0.00				MCS MAR 1 1 2016			
Quality Control									

MCS MAR 1 1 2016

DQA: _____ Date: _____

WORK ORDER NON-CONFORMANCE / UPDATE

DART AEROSPACE

QA Closed: Date: Work Order update only ☐

Work Order: _____

Part No. _____

NCR No.

DISPOSITION

Rework ☐
Scrap ☐
Use-as-is ☐
Suspected Unapproved ☐

AGAINST DEPARTMENT/PROCESS

Skid-tube	☐	Cross tube	☐	Water Jet	☐	Engineering	☐
Machining	☐	Small Fab	☐	Prod. Eng. Coor.	☐	Quality	☐
Thermoforming	☐	Finishing	☐	Rec/Store/Packaging	☐	Other	☐
Large Fab	☐	Composite	☐	Supplier	☐		☐

Date :	Step #:	QTY Effective :	MRB (QSI042) Approval

Description Work Order Deviation	Disposition	Completed By
		Lead hand / Supervisor Approval Verification
		QC / QA Coordinator Approval

Root Cause

Environment	☐	☐	No Re-verification
Design	☐	☐	Operator
Doc/Data	☐	☐	Offset/Setup
Equip/Tooling	☐	☐	Supplier
Handling/Pre	☐	☐	Training
Material	☐	☐	Use for Testing
Internal Transport	☐	☐	Poor Information
Tribal Knowledge	☐	☐	Rushing
LOA	☐	☐	Product Improvement
Substation	☐	☐	Process Improvement
Past Expiry Date	☐	☐	Manufacturing Process
Misidentified	☐	☐	Past Due

FAULT CATEGORY

☐	Pressure/Forced	☐	Temperature/Cure	☐	Power Loss/Surge	☐	Positioned Wrong
☐	Bending	☐	Set-up	☐	Folio/Program	☐	Outside Dimensions
☐	Centre Not Concentric	☐	BOM/Route	☐	Grain	☐	Over/Under tolerance
☐	Cracks	☐	Broken/Damage/Defect	☐	Weld	☐	Part Incorrect
☐	Crimp/Kink/Ripple/Wave	☐	Inspection Incomplete/Unqualified	☐	Wrong Stock Pulled	☐	Part Lost/Missing
☐	Cuffs	☐	Contamination	☐	Out of Sequence	☐	Part Moved
☐	Crushing	☐	Countersink	☐	Off-set	☐	Drawing
☐	Heat Treat	☐	Cut Too Short	☐	Mislabeled	☐	Finish
☐	Wave/Twist in Tube	☐	Instructions Incomplete/Unclear	☐	Fit/Function	☐	Misread
☐	Marks/Chatter	☐	Drill Holes	☐	Misaligned/off center	☐	Turning Sequence

☐ OTHER :

Picklist Print

Wednesday, March 02, 2016 8:35:27 AM

Work Order ID: 142187 *142187*

Parent Item: D350-607-541 *D350-607-541*

Parent Item Name: Quick Release Heli-Utility-Basket™ Long, HD Lid, Spacepod™/Squirrel Cheek Comp.

Start Date: 3/7/2016 **Required Date:** 3/14/2016

Start Qty: 1.00 **Required Qty:** 1.00

Comments: IPP REV:A 10-08-19 AS PER REV.A DD VERF BY:EC IPP Rev:B 11.02.09 add to install label DD verf by:EC IPP REV:C 12.03.06 AS PER ECN12-535 DD VERF:EC IPP REV:D 12.07.24 AS PER ECN 12-610 DD VERF:EC IPP REV:E 13.08.21 CHG005 / ECN 13-624 DD VERF:JLM IPP REV:F 14.06.09 AS PER ECN14-572 DD VERF:JLM

Component Item ID/ Item Name	Replacement Item ID	Mfg/ Purch	Bin Item	Primary Location	Last Location	Route Seq ID	Unit of Measure	Qty on Hand	Qty per Kit	Total Qty	Qty Issued	Date Issued	Status
D4086-200 *D4086-200* Placard, Max Load		Manufactured	No			110	Each	13.0000	1 **	1		DAS 6 9-89	DAS 28 9-89
				Location		**Loc Qty**		**Loc Code**					
				ST078		13							
					139663	3							
					140764	10							
D4917-300 *D4917-300* Placard, Max Load		Manufactured	No			110	Each	17.0000	1 **	1		DAS 6 9-89	DAS 28 9-89
				Location		**Loc Qty**		**Loc Code**					
				ST137		17							
					138526	7						DAS 6 9-89	
					141303	10							
D350-607-511 *D350-607-511* Quick Release Basket and Long Cargo Tube Mounting Provisions, Fits LH or RH		Manufactured	No			110	Each	0.0000	1 **	1 141926			DAS 28 9-89
D2690-6 *D2690-6* Lanyard		Manufactured	No			110	Each	11.0000	1 **	1		DAS 6 9-89	DAS 28 9-89
				Location		**Loc Qty**		**Loc Code**					
				ST009		11							
					140803	11							

DAS 27 9-89

DAS 27 9-89

DAS 27 9-89

MAR 0 8 2016

DQA: _____ Date: _____

WORK ORDER NON-CONFORMANCE / UPDATE

DART AEROSPACE

QA Closed: Date: Work Order update only ☐

Work Order: _____

Part No. _____

NCR No.

DISPOSITION

Rework ☐
Scrap ☐
Use-as-is ☐
Suspected Unapproved ☐

AGAINST DEPARTMENT/PROCESS

Skid-tube	☐	Cross tube	☐	Water Jet	☐	Engineering	☐
Machining	☐	Small Fab	☐	Prod. Eng. Coor.	☐	Quality	☐
Thermoforming	☐	Finishing	☐	Rec/Store/Packaging	☐	Other	☐
Large Fab	☐	Composite	☐	Supplier	☐		

Date :	Step #:	QTY Effective :	MRB (QSI042) Approval

Description Work Order Deviation	Disposition	Completed By
		Lead hand / Supervisor Approval Verification
		QC / QA Coordinator Approval

Root Cause

Environment	☐	☐	No Re-verfication
Design	☐	☐	Operator
Doc/Data	☐	☐	Offset/Setup
Equip/Tooling	☐	☐	Supplier
Handling/Pre	☐	☐	Training
Material	☐	☐	Use for Testing
Internal Transport	☐	☐	Poor Information
Tribal Knowledge	☐	☐	Rushing
LOA	☐	☐	Product Improvement
Substation	☐	☐	Process Improvement
Past Expiry Date	☐	☐	Manufacturing Process
Misidentified	☐	☐	Past Due

FAULT CATEGORY

☐	Pressure/Forced	☐	Temperature/Cure	☐	Power Loss/Surge	☐	Positioned Wrong
☐	Bending	☐	Set-up	☐	Folio/Program	☐	Outside Dimensions
☐	Centre Not Concentric	☐	BOM/Route	☐	Grain	☐	Over/Under tolerance
☐	Cracks	☐	Broken/Damage/Defect	☐	Weld	☐	Part Incorrect
☐	Crimp/Kink/Ripple/Wave	☐	Inspection Incomplete/Unqualified	☐	Wrong Stock Pulled	☐	Part Lost/Missing
☐	Cuffs	☐	Contamination	☐	Out of Sequence	☐	Part Moved
☐	Crushing	☐	Countersink	☐	Off-set	☐	Drawing
☐	Heat Treat	☐	Cut Too Short	☐	Mislabeled	☐	Finish
☐	Wave/Twist in Tube	☐	Instructions Incomplete/Unclear	☐	Fit/Function	☐	Misread
☐	Marks/Chatter	☐	Drill Holes	☐	Misaligned/off center	☐	Turning Sequence

☐ OTHER :

Work Order ID: 142187 *142187*

Parent Item: D350-607-541 *D350-607-541*

Parent Item Name: Quick Release Heli-Utility-Basket™ Long, HD Lid, Spacepod™/Squirrel Cheek Comp.

Start Date: 3/7/2016 **Required Date:** 3/14/2016

Start Qty: 1.00 **Required Qty:** 1.00

D3912-041	Manufactured	No		110	Each	8.0000	1	1

D3912-041

Eyebolt Receiver Assy

DAS 27 9-89

Location	Loc Qty	Loc Code
ST057	1	
139441	1	
ST064A	7	
139441	7	

D4030-041	Manufactured	No		110	Each	0.0000	1	1

D4030-041

Long Basket Assembly (350)

D4151-041	Manufactured	No		110	Each	4.0000	1	1

D4151-041

Basket Fwd Hardpoint Assembly, Lower

Location	Loc Qty	Loc Code
ST087	4	
141713	4	

DAS 27 9-89

D4151-043	Manufactured	No		110	Each	4.0000	1	1

D4151-043

Basket Fwd Hardpoint Assembly, Upper

Location	Loc Qty	Loc Code
ST088	4	
141714	4	

DAS 27 9-89

D4150-041	Manufactured	No		110	Each	2.0000	1	1

D4150-041

Attachment Arm Assembly

Location	Loc Qty	Loc Code
ST087	2	
138296	2	

DAS 27 9-89

DAS 6 9-89 DAS 28 9-89

142217

MAR 08 2016

DQA: _____ Date: _____

WORK ORDER NON-CONFORMANCE / UPDATE

DART AEROSPACE

QA Closed: Date: Work Order update only ☐

Work Order: _____

Part No. _____

NCR No.

DISPOSITION

Rework ☐
Scrap ☐
Use-as-is ☐
Suspected Unapproved ☐

AGAINST DEPARTMENT/PROCESS

Skid-tube	☐	Cross tube	☐	Water Jet	☐	Engineering	☐
Machining	☐	Small Fab	☐	Prod. Eng. Coor.	☐	Quality	☐
Thermoforming	☐	Finishing	☐	Rec/Store/Packaging	☐	Other	☐
Large Fab	☐	Composite	☐	Supplier	☐		

Date :	Step #:	QTY Effective :	MRB (QSI042) Approval

Description Work Order Deviation	Disposition	Completed By
		Lead hand / Supervisor Approval Verification
		QC / QA Coordinator Approval

Root Cause

Environment	☐	☐	No Re-verfication
Design	☐	☐	Operator
Doc/Data	☐	☐	Offset/Setup
Equip/Tooling	☐	☐	Supplier
Handling/Pre	☐	☐	Training
Material	☐	☐	Use for Testing
Internal Transport	☐	☐	Poor Information
Tribal Knowledge	☐	☐	Rushing
LOA	☐	☐	Product Improvement
Substation	☐	☐	Process Improvement
Past Expiry Date	☐	☐	Manufacturing Process
Misidentified	☐	☐	Past Due

FAULT CATEGORY

☐ Pressure/Forced	☐ Temperature/Cure	☐ Power Loss/Surge	☐ Positioned Wrong
☐ Bending	☐ Set-up	☐ Folio/Program	☐ Outside Dimensions
☐ Centre Not Concentric	☐ BOM/Route	☐ Grain	☐ Over/Under tolerance
☐ Cracks	☐ Broken/Damage/Defect	☐ Weld	☐ Part Incorrect
☐ Crimp/Kink/Ripple/Wave	☐ Inspection Incomplete/Unqualified	☐ Wrong Stock Pulled	☐ Part Lost/Missing
☐ Cuffs	☐ Contamination	☐ Out of Sequence	☐ Part Moved
☐ Crushing	☐ Countersink	☐ Off-set	☐ Drawing
☐ Heat Treat	☐ Cut Too Short	☐ Mislabeled	☐ Finish
☐ Wave/Twist in Tube	☐ Instructions Incomplete/Unclear	☐ Fit/Function	☐ Misread
☐ Marks/Chatter	☐ Drill Holes	☐ Misaligned/off center	☐ Turning Sequence

☐ OTHER :

Work Order ID: 142187 *142187*

Parent Item: D350-607-541 *D350-607-541*

Parent Item Name: Quick Release Heli-Utility-Basket™ Long, HD Lid, Spacepod™/Squirrel Cheek Comp.

Start Date: 3/7/2016 **Required Date:** 3/14/2016

Start Qty: 1.00 **Required Qty:** 1.00

AN4-13A	Purchased	No		110	Each	523.0000	6	6

AN4-13A

Bolt

DAS 6 9-89 DAS 28 9-89

DAS 27 9-89

Location		Loc Qty	Loc Code
FG		20	
	122808	20	
GA		120	
	m134167	120	
over003		350	
	m134039	50	
	m134260	300	
ST344		33	
	m133998	33	

AN4C15	Purchased	No		110	Each	33.0000	1	1

AN4C15

Bolt

DAS 6 9-89 DAS 28 9-89

MAR 08 2016

DAS 27 9-89

Location		Loc Qty	Loc Code
over003		12	
	M134257	12	
ST343		21	
	M133483	1	
	M133694	20	

DQA: _____ Date: _____

WORK ORDER NON-CONFORMANCE / UPDATE

QA Closed: Date: Work Order update only ☐

Work Order: _____

Part No. _____

NCR No.

DISPOSITION

Rework ☐
Scrap ☐
Use-as-is ☐
Suspected Unapproved ☐

AGAINST DEPARTMENT/PROCESS

Skid-tube ☐ Cross tube ☐ Water Jet ☐ Engineering ☐
Machining ☐ Small Fab ☐ Prod. Eng. Coor. ☐ Quality ☐
Thermoforming ☐ Finishing ☐ Rec/Store/Packaging ☐ Other ☐
Large Fab ☐ Composite ☐ Supplier ☐

Date :	Step #:	QTY Effective :	MRB (QSI042) Approval

Description Work Order Deviation	Disposition	Completed By
		Lead hand / Supervisor Approval Verification
		QC / QA Coordinator Approval

Root Cause

Environment	☐	☐	No Re-verfication
Design	☐	☐	Operator
Doc/Data	☐	☐	Offset/Setup
Equip/Tooling	☐	☐	Supplier
Handling/Pre	☐	☐	Training
Material	☐	☐	Use for Testing
Internal Transport	☐	☐	Poor Information
Tribal Knowledge	☐	☐	Rushing
LOA	☐	☐	Product Improvement
Substation	☐	☐	Process Improvement
Past Expiry Date	☐	☐	Manufacturing Process
Misidentified	☐	☐	Past Due

FAULT CATEGORY

☐ Pressure/Forced	☐ Temperature/Cure	☐ Power Loss/Surge	☐ Positioned Wrong
☐ Bending	☐ Set-up	☐ Folio/Program	☐ Outside Dimensions
☐ Centre Not Concentric	☐ BOM/Route	☐ Grain	☐ Over/Under tolerance
☐ Cracks	☐ Broken/Damage/Defect	☐ Weld	☐ Part Incorrect
☐ Crimp/Kink/Ripple/Wave	☐ Inspection Incomplete/Unqualified	☐ Wrong Stock Pulled	☐ Part Lost/Missing
☐ Cuffs	☐ Contamination	☐ Out of Sequence	☐ Part Moved
☐ Crushing	☐ Countersink	☐ Off-set	☐ Drawing
☐ Heat Treat	☐ Cut Too Short	☐ Mislabeled	☐ Finish
☐ Wave/Twist in Tube	☐ Instructions Incomplete/Unclear	☐ Fit/Function	☐ Misread
☐ Marks/Chatter	☐ Drill Holes	☐ Misaligned/off center	☐ Turning Sequence

☐ OTHER :

Work Order ID: 142187 *142187*
Parent Item: D350-607-541 *D350-607-541*
Parent Item Name: Quick Release Heli-Utility-Basket™ Long, HD Lid, Spacepod™/Squirrel Cheek Comp.
Start Date: 3/7/2016 **Required Date:** 3/14/2016
Start Qty: 1.00 **Required Qty:** 1.00

AN310C4 Purchased No 110 Each 99.0000 1 1
AN310C4
Nut
DAS 6 9-89 DAS 28 9-89

Location		Loc Qty	Loc Code
OVER007		50	
	M133990	50	
ST331		49	
	M132344	3	
	M133483	1	
	M133694	15	
	M134370	30	

DAS 27 9-89

MS17984-C413 Purchased No 110 Each 42.0000 1 1
MS17984-C413
Quick Release Pin
DAS 6 9-89 DAS 28 9-89

Location		Loc Qty	Loc Code
over005		30	
	m133686	20	
	m134052	10	
ST315		12	
	m134029	12	

DAS 27 9-89

MS21042L4 Purchased No 110 Each 2,033.000 6 6
MS21042L4
Locknut
DAS 6 9-89 DAS 28 9-89
MAR 08 2016

Location		Loc Qty	Loc Code
FP001		37	
	m133363	37	
GA		471	
	m133769	471	
ST303		1428	
	m134055	1428	
ST305		97	
	m130922	97	

DAS 27 9-89

DQA: _____ Date: _____

WORK ORDER NON-CONFORMANCE / UPDATE

DART AEROSPACE

QA Closed: Date: Work Order update only ☐

Work Order: _____

Part No. _____

NCR No.

DISPOSITION

Rework ☐
Scrap ☐
Use-as-is ☐
Suspected Unapproved ☐

AGAINST DEPARTMENT/PROCESS

Skid-tube	☐	Cross tube	☐	Water Jet	☐	Engineering	☐
Machining	☐	Small Fab	☐	Prod. Eng. Coor.	☐	Quality	☐
Thermoforming	☐	Finishing	☐	Rec/Store/Packaging	☐	Other	☐
Large Fab	☐	Composite	☐	Supplier	☐		☐

Date :	Step #:	QTY Effective :	MRB (QSI042) Approval

Description Work Order Deviation	Disposition	Completed By
		Lead hand / Supervisor Approval Verification
		QC / QA Coordinator Approval

Root Cause

Environment	☐	☐	No Re-verfication
Design	☐	☐	Operator
Doc/Data	☐	☐	Offset/Setup
Equip/Tooling	☐	☐	Supplier
Handling/Pre	☐	☐	Training
Material	☐	☐	Use for Testing
Internal Transport	☐	☐	Poor Information
Tribal Knowledge	☐	☐	Rushing
LOA	☐	☐	Product Improvement
Substation	☐	☐	Process Improvement
Past Expiry Date	☐	☐	Manufacturing Process
Misidentified	☐	☐	Past Due

FAULT CATEGORY

☐ Pressure/Forced	☐ Temperature/Cure	☐ Power Loss/Surge	☐ Positioned Wrong
☐ Bending	☐ Set-up	☐ Folio/Program	☐ Outside Dimensions
☐ Centre Not Concentric	☐ BOM/Route	☐ Grain	☐ Over/Under tolerance
☐ Cracks	☐ Broken/Damage/Defect	☐ Weld	☐ Part Incorrect
☐ Crimp/Kink/Ripple/Wave	☐ Inspection Incomplete/Unqualified	☐ Wrong Stock Pulled	☐ Part Lost/Missing
☐ Cuffs	☐ Contamination	☐ Out of Sequence	☐ Part Moved
☐ Crushing	☐ Countersink	☐ Off-set	☐ Drawing
☐ Heat Treat	☐ Cut Too Short	☐ Mislabeled	☐ Finish
☐ Wave/Twist in Tube	☐ Instructions Incomplete/Unclear	☐ Fit/Function	☐ Misread
☐ Marks/Chatter	☐ Drill Holes	☐ Misaligned/off center	☐ Turning Sequence

☐ OTHER :

Work Order ID: 142187 *142187*

Parent Item: D350-607-541 *D350-607-541*

Parent Item Name: Quick Release Heli-Utility-Basket™ Long, HD Lid, Spacepod™/Squirrel Cheek Comp.

Start Date: 3/7/2016 **Required Date:** 3/14/2016

Start Qty: 1.00 **Required Qty:** 1.00

MS24665-151	Purchased	No		110	Each	193.0000	1	1

MS24665-151
Cotter Pin

DAS 27 9-89

Location		Loc Qty	Loc Code
GA		64	
	m128401	64	
ST289		129	
	m133769	29	
	m134294	100	

DAS 6 9-89 DAS 28 9-89

NAS1515H4L	Purchased	No		110	Each	349.0000	2	2

NAS1515H4L
Washer

DAS 27 9-89

Location		Loc Qty	Loc Code
FG		22	
	103691	2	
	m132189	20	
ST260a		100	
	m134376	100	
ST266		227	
	m132767	27	
	m133483	200	

DAS 6 9-89 DAS 28 9-89

NAS1149F0432P	Purchased	No		110	Each	1,059.000	12	12

NAS1149F0432P
WASHER

DAS 27 9-89

Location		Loc Qty	Loc Code
ST262		938	
	M133990	938	
st268		121	
	M132677	121	

DAS 6 9-89 DAS 28 9-89

MAR 08 2016

DQA: _____ Date: _____

WORK ORDER NON-CONFORMANCE / UPDATE

DART AEROSPACE

QA Closed: Date: Work Order update only ☐

Work Order: _____

Part No. _____

NCR No.

DISPOSITION

Rework	☐
Scrap	☐
Use-as-is	☐
Suspected Unapproved	☐

AGAINST DEPARTMENT/PROCESS

Skid-tube	☐	Cross tube	☐	Water Jet	☐	Engineering	☐
Machining	☐	Small Fab	☐	Prod. Eng. Coor.	☐	Quality	☐
Thermoforming	☐	Finishing	☐	Rec/Store/Packaging	☐	Other	☐
Large Fab	☐	Composite	☐	Supplier	☐		

Date :	Step #:	QTY Effective :	MRB (QSI042) Approval

Description Work Order Deviation	Disposition	Completed By
		Lead hand / Supervisor Approval Verification
		QC / QA Coordinator Approval

Root Cause

Environment	☐	☐	No Re-verfication
Design	☐	☐	Operator
Doc/Data	☐	☐	Offset/Setup
Equip/Tooling	☐	☐	Supplier
Handling/Pre	☐	☐	Training
Material	☐	☐	Use for Testing
Internal Transport	☐	☐	Poor Information
Tribal Knowledge	☐	☐	Rushing
LOA	☐	☐	Product Improvement
Substation	☐	☐	Process Improvement
Past Expiry Date	☐	☐	Manufacturing Process
Misidentified	☐	☐	Past Due

FAULT CATEGORY

☐ Pressure/Forced	☐ Temperature/Cure	☐ Power Loss/Surge	☐ Positioned Wrong
☐ Bending	☐ Set-up	☐ Folio/Program	☐ Outside Dimensions
☐ Centre Not Concentric	☐ BOM/Route	☐ Grain	☐ Over/Under tolerance
☐ Cracks	☐ Broken/Damage/Defect	☐ Weld	☐ Part Incorrect
☐ Crimp/Kink/Ripple/Wave	☐ Inspection Incomplete/Unqualified	☐ Wrong Stock Pulled	☐ Part Lost/Missing
☐ Cuffs	☐ Contamination	☐ Out of Sequence	☐ Part Moved
☐ Crushing	☐ Countersink	☐ Off-set	☐ Drawing
☐ Heat Treat	☐ Cut Too Short	☐ Mislabeled	☐ Finish
☐ Wave/Twist in Tube	☐ Instructions Incomplete/Unclear	☐ Fit/Function	☐ Misread
☐ Marks/Chatter	☐ Drill Holes	☐ Misaligned/off center	☐ Turning Sequence

☐ OTHER :

Work Order ID: 142187 *142187*

Parent Item: D350-607-541 *D350-607-541*

Parent Item Name: Quick Release Heli-Utility-Basket™ Long, HD Lid, Spacepod™/Squirrel Cheek Comp.

Start Date: 3/7/2016 **Required Date:** 3/14/2016

Start Qty: 1.00 **Required Qty:** 1.00

NAS1149C0463R	Purchased	No		110	Each	366.0000	3	3

NAS1149C0463R

Washer

**

DAS 6 9-89 DAS 28 9-89

Location		Loc Qty	Loc Code	
FP001		72		
	m127306	72		
ST260a		200		
	m134167	200		
ST271		94		
	m133077	94		3

MAR 0 8 2016

DAS 27 9-89

DQA: _____ Date: _____

WORK ORDER NON-CONFORMANCE / UPDATE

QA Closed: Date: Work Order update only ☐

Work Order: _____

Part No. _____

NCR No.

DISPOSITION

Rework ☐
Scrap ☐
Use-as-is ☐
Suspected Unapproved ☐

AGAINST DEPARTMENT/PROCESS

Skid-tube ☐ Cross tube ☐ Water Jet ☐ Engineering ☐
Machining ☐ Small Fab ☐ Prod. Eng. Coor. ☐ Quality ☐
Thermoforming ☐ Finishing ☐ Rec/Store/Packaging ☐ Other ☐
Large Fab ☐ Composite ☐ Supplier ☐

Date :	Step #:	QTY Effective :	MRB (QSI042) Approval

Description Work Order Deviation	Disposition	Completed By
		Lead hand / Supervisor Approval Verification
		QC / QA Coordinator Approval

Root Cause

Environment	☐	☐	No Re-verfication
Design	☐	☐	Operator
Doc/Data	☐	☐	Offset/Setup
Equip/Tooling	☐	☐	Supplier
Handling/Pre	☐	☐	Training
Material	☐	☐	Use for Testing
Internal Transport	☐	☐	Poor Information
Tribal Knowledge	☐	☐	Rushing
LOA	☐	☐	Product Improvement
Substation	☐	☐	Process Improvement
Past Expiry Date	☐	☐	Manufacturing Process
Misidentified	☐	☐	Past Due

FAULT CATEGORY

☐ Pressure/Forced	☐ Temperature/Cure	☐ Power Loss/Surge	☐ Positioned Wrong
☐ Bending	☐ Set-up	☐ Folio/Program	☐ Outside Dimensions
☐ Centre Not Concentric	☐ BOM/Route	☐ Grain	☐ Over/Under tolerance
☐ Cracks	☐ Broken/Damage/Defect	☐ Weld	☐ Part Incorrect
☐ Crimp/Kink/Ripple/Wave	☐ Inspection Incomplete/Unqualified	☐ Wrong Stock Pulled	☐ Part Lost/Missing
☐ Cuffs	☐ Contamination	☐ Out of Sequence	☐ Part Moved
☐ Crushing	☐ Countersink	☐ Off-set	☐ Drawing
☐ Heat Treat	☐ Cut Too Short	☐ Mislabeled	☐ Finish
☐ Wave/Twist in Tube	☐ Instructions Incomplete/Unclear	☐ Fit/Function	☐ Misread
☐ Marks/Chatter	☐ Drill Holes	☐ Misaligned/off center	☐ Turning Sequence

☐ OTHER :

DART SERVICE INSTRUCTION

TO AMEND INSTALLATION INSTRUCTIONS D350-607-3 Rev.D,
INSTALLATION INSTRUCTIONS D350-607-4 Rev. C AND
INSTRUCTIONS FOR CONTINUED AIRWORTHINESS ICA-D350-607 REV. 6
REF TCCA STC: SH94-14
REF FAA STC: SR00213NY
REF EASA STC: EASA.10016996
REF BRAZILIAN STC: 2007S03-03/-04/-05/-06

1.0 PURPOSE

This service instruction provides parts and instructions to faciliate installation of forward Basket Strut for customers that have purchased: D350-607-501 Conversion Kit @ CHG 004, D350-607-511 Quick Release Basket Mounting Kit @ CHG 004, D350-607-541 @ CHG 006, D350-607-543 @ CHG 007, D350-607-545 @ CHG 006, D350-607-547 @ CHG 007 Heli-Utility-Baskets as well as the D350-607-431 Strut Retrofit Kit and the D350-607-641 Long Cargo Tube @ CHG 001.

2.0 PARTS LIST:

Modify the quantities for D3910-5 and add D3910-7 as follows:

QTY -541	QTY -543	QTY -545	QTY -547	QTY -511	QTY -501	PART NUMBER	DESCRIPTION
X						D350-607-541	HELI-UTILITY-BASKET @ CHG 007 OR LATER
	X					D350-607-543	HELI-UTILITY-BASKET @ CHG 008 OR LATER
		X				D350-607-545	HELI-UTILITY-BASKET @ CHG 007 OR LATER
			X			D350-607-547	HELI-UTILITY-BASKET @ CHG 005 OR LATER
1	1	1	1	X		D350-607-511	QUICK RELEASE BASKET MOUNTING KIT @ CHG 005 OR LATER
					X	D350-607-501	CONVERSION KIT @ CHG 005 OR LATER
				1	1	D3910-5	X-TUBE LUG
				1	1	D3910-7	X-TUBE LUG (ADD)

QTY -413	QTY -415	QTY -417	QTY -419	QTY -431	PART NUMBER	DESCRIPTION
X					D350-607-413	HEAVY DUTY LID KIT (LONG)
	X				D350-607-415	HEAVY DUTY LID KIT (SHORT)
		X			D350-607-417	LIGHTWEIGHT LID KIT (LONG)
			X		D350-607-419	LIGHTWEIGHT LID KIT (SHORT)
				X	D350-607-431	STRUT RETROFIT KIT @ CHG 005 OR LATER
				1	D3910-5	X-TUBE LUG
				1	D3910-7	X-TUBE LUG (ADD)

QTY -641	QTY -611	QTY -511	QTY -431	PART NUMBER	DESCRIPTION
X				D350-607-641	QUICK RELEASE LONG CARGO TUBE
1	X			D350-607-611	LONG CARGO TUBE
1		X		D350-607-511	QUICK RELEASE BASKET MOUNTING KIT @ CHG 005 OR LATER
			X	D350-607-431	STRUT RETROFIT KIT @ CHG 005 OR LATER
		1	1	D3910-5	X-TUBE LUG
		1	1	D3910-7	X-TUBE LUG (ADD)

CANADA
DEPARTMENT OF TRANSPORT
AIRCRAFT CERTIFICATION
BRANCH
DAO # 01-O-01

APPROVED
BY: _____
D. SHEPHERD (DE # 02)

DATE: 14.05.16
CERT. NO.: SH94-14
ISSUE NO.: 6

REV.	DESCRIPTION	BY	DATE
A	NEW ISSUE	AJS	14.05.16

DESIGN	AJS	DART AEROSPACE LTD	
DRAWN	AJS	HAWKESBURY, ONTARIO, CANADA	
CHECKED		DRAWING NO.	REV. A
MFG. APPR.	N/A	DSI 9699	SHEET 1 OF 2
APPROVED		TITLE	SCALE
DE APPR.		LUG REPLACEMENT	NTS
DATE	14.05.16		

COPYRIGHT © 2014 BY DART AEROSPACE LTD
THIS DOCUMENT IS PRIVATE AND CONFIDENTIAL AND IS SUPPLIED ON THE EXPRESS CONDITION THAT IT IS NOT TO BE USED FOR ANY PURPOSE OR COPIED OR COMMUNICATED TO ANY OTHER PERSON WITHOUT WRITTEN PERMISSION FROM DART AEROSPACE LTD.

3.0 PROCEDURE:

Install the D350-607-501 Conversion Kit, D350-607-511 Quick Release Mounting Kit or D350-607-431 Strut retofit kit per Installation Instructions D350-607-3 Rev. D or D350-607-4 Rev. C. While installing the Forward Strut perform the following:

3.1 Substitute the Forward Lower D3910-5 X-Tube Lug with the D3910-7 X-Tube Lug as shown in Figure 1.

3.2 Install the forward D4775-041 Strut Assembly. Transfer mark from the upper hole on the clevis of the D4775-041 Strut Assembly to the D3910-7 X-tube Lug and drill thru the lug ∅0.257-∅0.261 as shown in Figure 1. Touch up chemical conversion coating per MIL-DTL-5541. Check the witness holes located at the bottom end of the D4775-041 Strut Assemblies to ensure that the thread from the rod end extends past the witness hole. **Torque MS21042L4/-4 nuts to 50-70 in-lbs (5.7-7.9 N-m). Torque MS21042L6/-6 nuts to 160-190 in-lbs (18.1-21.5 N-m).**

3.3 Complete the installation in accordance with Installation Instructions D350-607-3 Rev. D or D350-607-4 Rev. C.

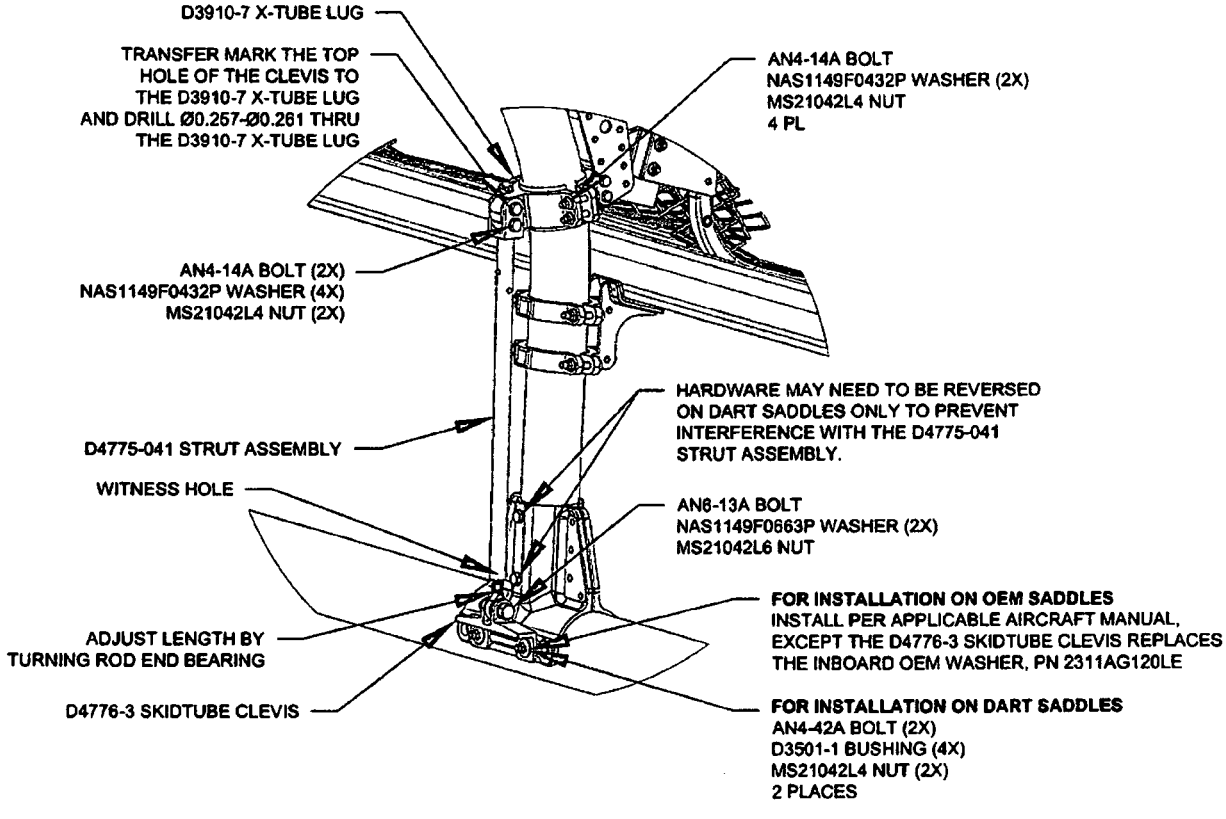

FIGURE 1: INSTALLATION OF D4775-041 FWD STRUT

4.0 WEIGHT AND BALANCE:

There is no weight and balance change associated with this update.

CANADA
DEPARTMENT OF TRANSPORT
AIRCRAFT CERTIFICATION
BRANCH
DAO # 01-O-01

APPROVED
BY: _____
D. SHEPHERD (DE # 02)

DATE: 14.05.16
CERT. NO.: SH94-14
ISSUE NO.: 6

DESIGN	AJS
DRAWN	AJS
CHECKED	
MFG. APPR.	N/A
APPROVED	
DE APPR.	
DATE	14.05.16

DART AEROSPACE LTD
HAWKESBURY, ONTARIO, CANADA

DRAWING NO. DSI 9699 REV. A
SHEET 2 OF 2

TITLE LUG REPLACEMENT SCALE NTS

COPYRIGHT © 2014 BY DART AEROSPACE LTD
THIS DOCUMENT IS PRIVATE AND CONFIDENTIAL AND IS SUPPLIED ON THE EXPRESS CONDITION THAT IT IS NOT TO BE USED FOR ANY PURPOSE OR COPIED OR COMMUNICATED TO ANY OTHER PERSON WITHOUT WRITTEN PERMISSION FROM DART AEROSPACE LTD.

Stock :)

Work Order ID 142187

Wednesday, March 02, 2016 8:35:22 AM

142187

Item ID: D350-607-541

Revision ID:

Item Name: Quick Release Heli-Utility-Basket™ Long, HD Lid, Spacepod™/Squirrel Cheek Comp.

Start Date: 3/7/2016 **Start Qty:** 1.00 *1*

Required Date: 3/14/2016 **Req'd Qty:** 1.00 *1*

Reference:

Accept *N900040100*

Setup Start *NS1*

Stop *NS2*

Cust Item ID:

Customer:

Approvals: **Process Plan:** _____ **Date:** 16-3-02 **Tooling:** _____ **Date:** _____

QC: _____ **Date:** _____ **SPC (Y/N):** _____ **Date:** _____

Run Start *NR1*

Stop *NR2*

Sequence ID/ Work Center ID	Operation Description	Set Up/ Run Hours	Tool ID	Tool #	Plan Code	Accept Qty	Reject Qty	Reject Number	Insp. Stamp
Draw Nbr	**Revision Nbr**								
D350-607-3	D								
DSI9699	A								
100	Document Control	0.00							MLJ MAR 10 2016
100	DOCUMENT CONTROL								
DC									
Doc.Control -USB or Paperwork	**Memo** Photocopy bluefile & type labels per PPP D350-607-541 CHG007	0.00							
110	Pick Kit	0.00							
110									
Packaging									
Packaging	**Memo**	0.01							MAR 08 2016

5.0 PARTS LIST

QTY -541	QTY -543	QTY -545	QTY -547	QTY -511	QTY -501	PART NUMBER	DESCRIPTION
X						D350-607-541	HELI-UTILITY-BASKET
	X					D350-607-543	HELI-UTILITY-BASKET
		X				D350-607-545	HELI-UTILITY-BASKET
			X			D350-607-547	HELI-UTILITY-BASKET
1	1	1	1	X		D350-607-511	QUICK RELEASE BASKET MOUNTING KIT
					X	D350-607-501	CONVERSION KIT
1	1	1	1		1	D2690-6	LANYARD
				8	8	D3501-1	BUSHING
				2	2	D3910-3	X-TUBE LUG
				2	2	D3910-5	X-TUBE LUG
1	1	1	1		1	D3912-041	EYEBOLT RECEIVER ASSY
				8	8	D3984-030	RUBBER EXTRUSION, X-TUBE
1						D4030-041	LONG BASKET ASSY
	1					D4030-043	LONG BASKET ASSY, LIGHTWEIGHT
		1				D4032-041	SHORT BASKET ASSY
			1			D4032-043	SHORT BASKET ASSY, LIGHTWEIGHT
1					1	D4917-300	PLACARD, MAX LOAD
1						D4086-200	PLACARD, MAX LOAD
	1				1	D4917-315	PLACARD, MAX LOAD
	1					D4086-215	PLACARD, MAX LOAD
		1			1	D4917-320	PLACARD, MAX LOAD
		1				D4086-220	PLACARD, MAX LOAD
			1		1	D4917-332	PLACARD, MAX LOAD
			1			D4086-232	PLACARD, MAX LOAD
				1	1	D4148-041	FWD X-TUBE LUG ASSY
				1	1	D4149-041	AFT X-TUBE LUG ASSY
1	1	1	1		1	D4150-041	ATTACHMENT ARM ASSY
1	1	1	1		1	D4151-041	BASKET FWD HARDPOINT ASSY (LOWER)
1	1	1	1		1	D4151-043	BASKET FWD HARDPOINT ASSY (UPPER)
				2	2	D4775-041	STRUT ASSEMBLY
				2	2	D4776-3	SKIDTUBE CLEVIS
6	6	6	6		6	AN4-13A	BOLT
				20	22	AN4-14A	BOLT
				4	4	AN4-42A	BOLT
1	1	1	1		1	AN4C15	BOLT
1	1	1	1		1	AN310C4	CASTELLATED NUT
				2	2	AN6-13A	BOLT
1	1	1	1		1	MS17984-C413	QUICK RELEASE PIN
6	6	6	6	24	32	MS21042L4	NUT (OR MS21042-4)
				2	2	MS21042L6	NUT
1	1	1	1		1	MS24665-151	COTTER PIN
2	2	2	2		2	NAS1515H4L	WASHER
12	12	12	12	40	56	NAS1149F0432P	WASHER
3	3	3	3		3	NAS1149C0463R	WASHER
				4	4	NAS1149F0663P	WASHER

• COPYRIGHT © 2010 BY DART AEROSPACE LTD •
THIS DOCUMENT IS PRIVATE AND CONFIDENTIAL AND IS SUPPLIED ON THE EXPRESS CONDITION THAT IT IS NOT TO BE USED FOR ANY PURPOSE OR COPIED OR COMMUNICATED TO ANY OTHER PERSON WITHOUT WRITTEN PERMISSION FROM DART AEROSPACE LTD.